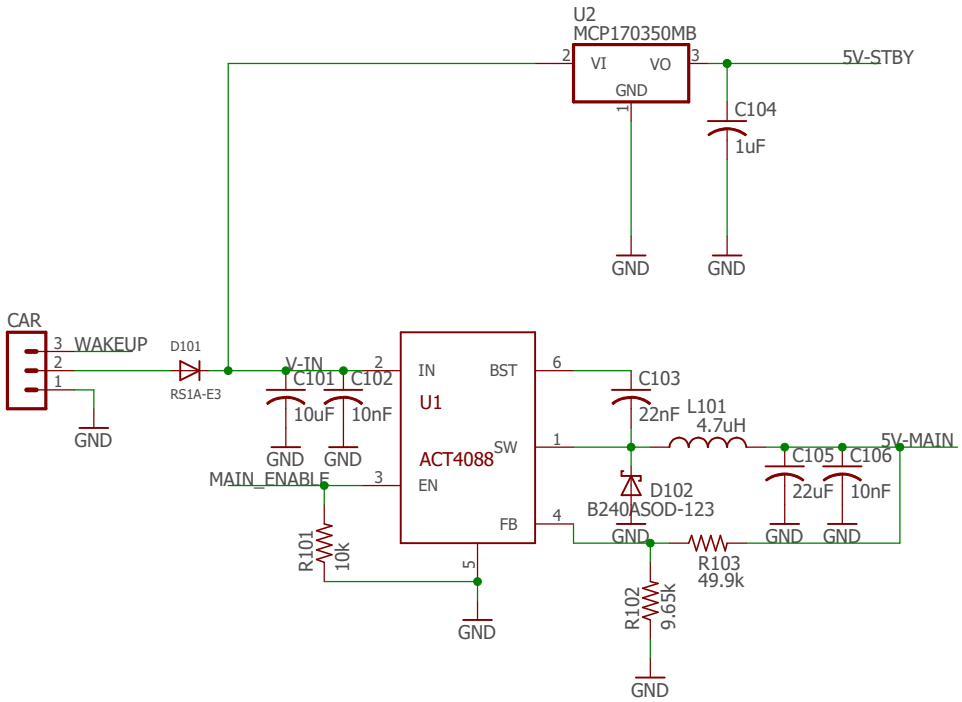
U2
MCP170350MB
VI
VO
GND
5V-STBY
C104
1uF
GND
GND
CAR
WAKEUP
D101
RS1A-E3
GND
V-IN
C101
C102
10uF
10nF
GND
GND
MAIN_ENABLE
IN
BST
U1
ACT4088
SW
EN
FB
C103
22nF
L101
4.7uH
5V-MAIN
C105
C106
22uF
10nF
D102
B240ASOD-123
GND
GND
GND
R101
10k
GND
R103
49.9k
R102
9.65k
GND

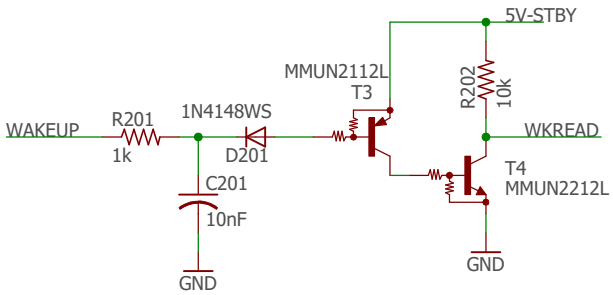
5V-STBY
MMUN2112L
T3
R202
10k
WAKEUP
R201
1k
1N4148WS
D201
WKREAD
T4
MMUN2212L
C201
10nF
GND
GND

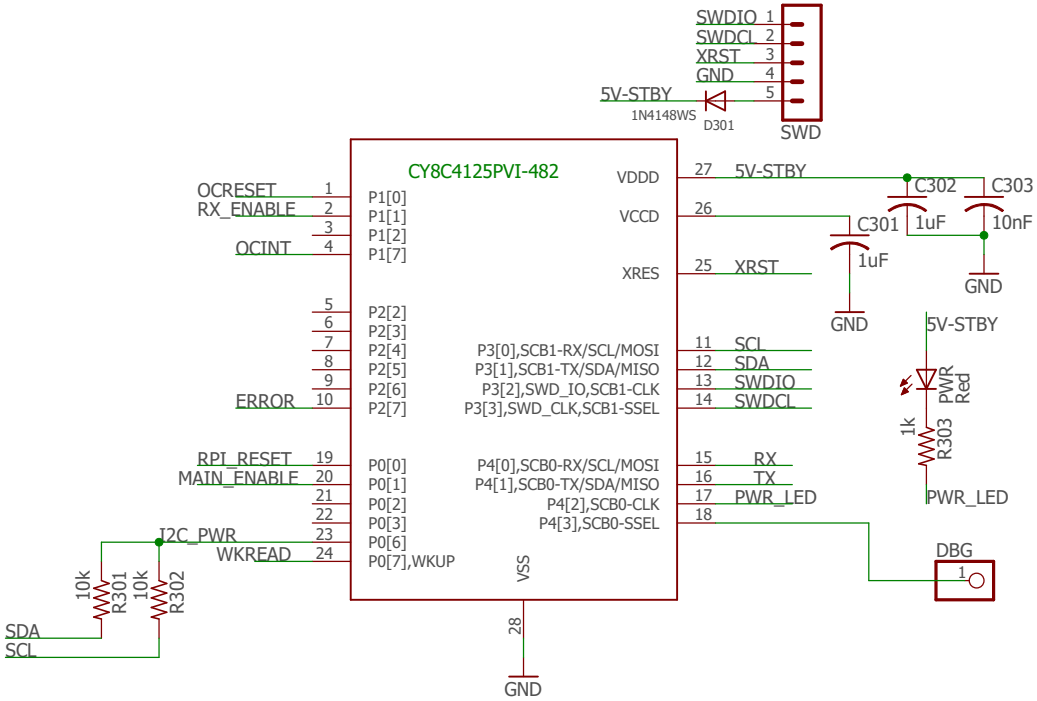
SWDIO 1
SWDCL 2
XRST 3
GND 4
5
5V-STBY
1N4148WS
D301
SWD
CY8C4125PVI-482
OCRESET 1
RX_ENABLE 2
3
OCINT 4
P1[0]
P1[1]
P1[2]
P1[7]
VDDD
VCCD
XRES
27 5V-STBY
26
25 XRST
C302
C303
C301
1uF
10nF
1uF
GND
GND
5V-STBY
5 P2[2]
6 P2[3]
7 P2[4]
8 P2[5]
9 P2[6]
ERROR 10 P2[7]
P3[0],SCB1-RX/SCL/MOSI
P3[1],SCB1-TX/SDA/MISO
P3[2],SWD_IO,SCB1-CLK
P3[3],SWD_CLK,SCB1-SSEL
11 SCL
12 SDA
13 SWDIO
14 SWDCL
PWR
Red
1k
R303
PWR_LED
RPI_RESET 19
MAIN_ENABLE 20
21
22
23
WKREAD 24
P0[0]
P0[1]
P0[2]
P0[3]
P0[6]
P0[7],WKUP
P4[0],SCB0-RX/SCL/MOSI
P4[1],SCB0-TX/SDA/MISO
P4[2],SCB0-CLK
P4[3],SCB0-SSEL
15 RX
16 TX
17 PWR_LED
18
I2C_PWR
DBG
1
10k
R301
10k
R302
SDA
SCL
VSS
28
GND

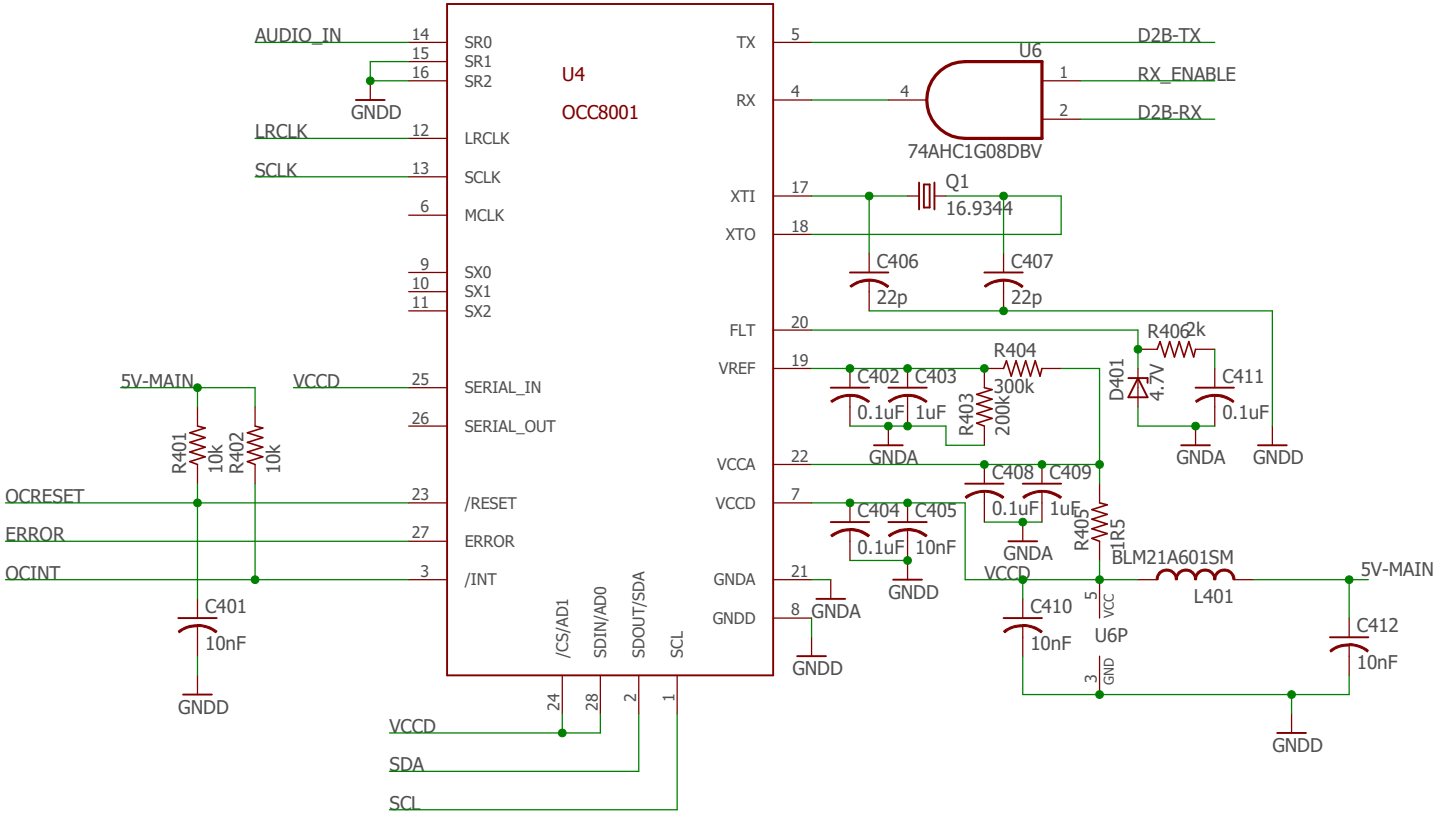
U4
OCC8001
AUDIO_IN
14
SR0
15
SR1
16
SR2
GNDD
LRCLK
12
LRCLK
SCLK
13
SCLK
6
MCLK
9
SX0
10
SX1
11
SX2
5V-MAIN
VCCD
25
SERIAL_IN
26
SERIAL_OUT
R401
10k
R402
10k
OCRESET
23
/RESET
ERROR
27
ERROR
OCINT
3
/INT
C401
10nF
GNDD
/CS/AD1
SDIN/AD0
SDOUT/SDA
SCL
24
28
2
1
VCCD
SDA
SCL
TX
5
RX
4
XTI
17
XTO
18
FLT
20
VREF
19
VCCA
22
VCCD
7
GNDA
21
GNDD
8
GNDD
D2B-TX
U6
RX_ENABLE
D2B-RX
74AHC1G08DBV
Q1
16.9344
C406
22p
C407
22p
R406
2k
R404
300k
D401
4.7V
C411
0.1uF
C402
0.1uF
C403
1uF
R403
200k
GNDA
GNDA
GNDD
C408
0.1uF
C409
1uF
C404
0.1uF
C405
10nF
GNDA
GNDD
R405
1R5
BLM21A601SM
L401
5V-MAIN
VCCD
C410
10nF
U6P
VCC
GND
C412
10nF
GNDD

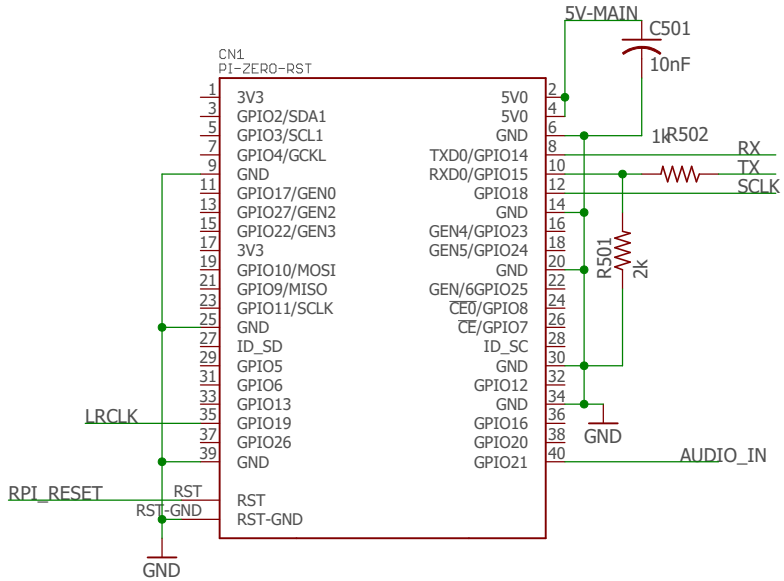
CN1
PI-ZERO-RST
5V-MAIN
C501
10nF
R502
1k
RX
TX
SCLK
R501
2k
GND
AUDIO_IN
LRCLK
RPI_RESET
RST
RST-GND
3V3
GPIO2/SDA1
GPIO3/SCL1
GPIO4/GCKL
GND
GPIO17/GEN0
GPIO27/GEN2
GPIO22/GEN3
3V3
GPIO10/MOSI
GPIO9/MISO
GPIO11/SCLK
GND
ID_SD
GPIO5
GPIO6
GPIO13
GPIO19
GPIO26
GND
5V0
5V0
GND
TXD0/GPIO14
RXD0/GPIO15
GPIO18
GND
GEN4/GPIO23
GEN5/GPIO24
GND
GEN/6GPIO25
CE0/GPIO8
CE/GPIO7
ID_SC
GND
GPIO12
GND
GPIO16
GPIO20
GPIO21

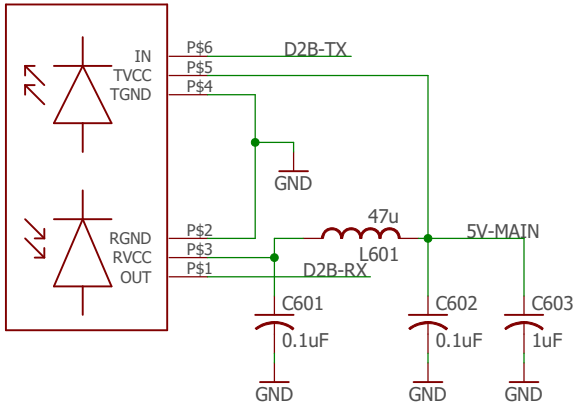
IN
TVCC
TGND
RGND
RVCC
OUT
P$6
P$5
P$4
P$2
P$3
P$1
D2B-TX
D2B-RX
GND
47u
L601
5V-MAIN
C601
0.1uF
C602
0.1uF
C603
1uF
GND
GND
GND