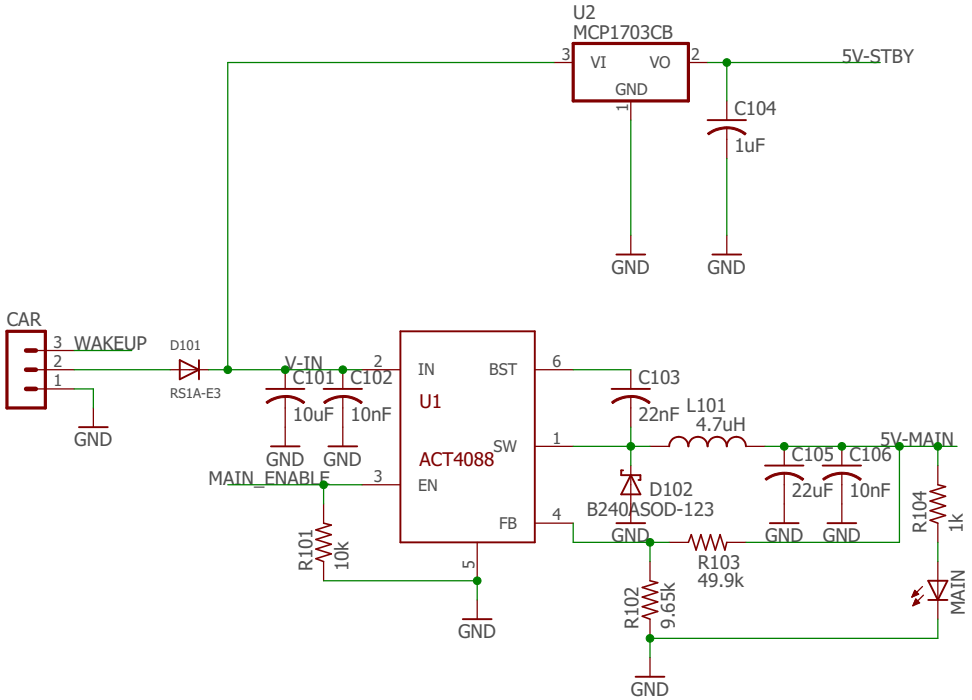
U2
MCP1703CB
VI
VO
GND
5V-STBY
C104
1uF
GND
GND
CAR
WAKEUP
D101
RS1A-E3
GND
V-IN
C101
10uF
C102
10nF
GND
GND
MAIN_ENABLE
R101
10k
IN
BST
U1
SW
ACT4088
EN
FB
GND
C103
22nF
L101
4.7uH
D102
B240ASOD-123
GND
R103
49.9k
R102
9.65k
GND
C105
22uF
C106
10nF
GND
GND
5V-MAIN
R104
1k
MAIN

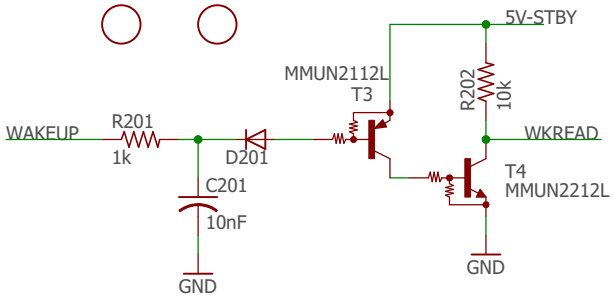
5V-STBY
MMUN2112L
T3
R202
10k
WAKEUP
R201
1k
D201
WKREAD
T4
MMUN2212L
C201
10nF
GND
GND

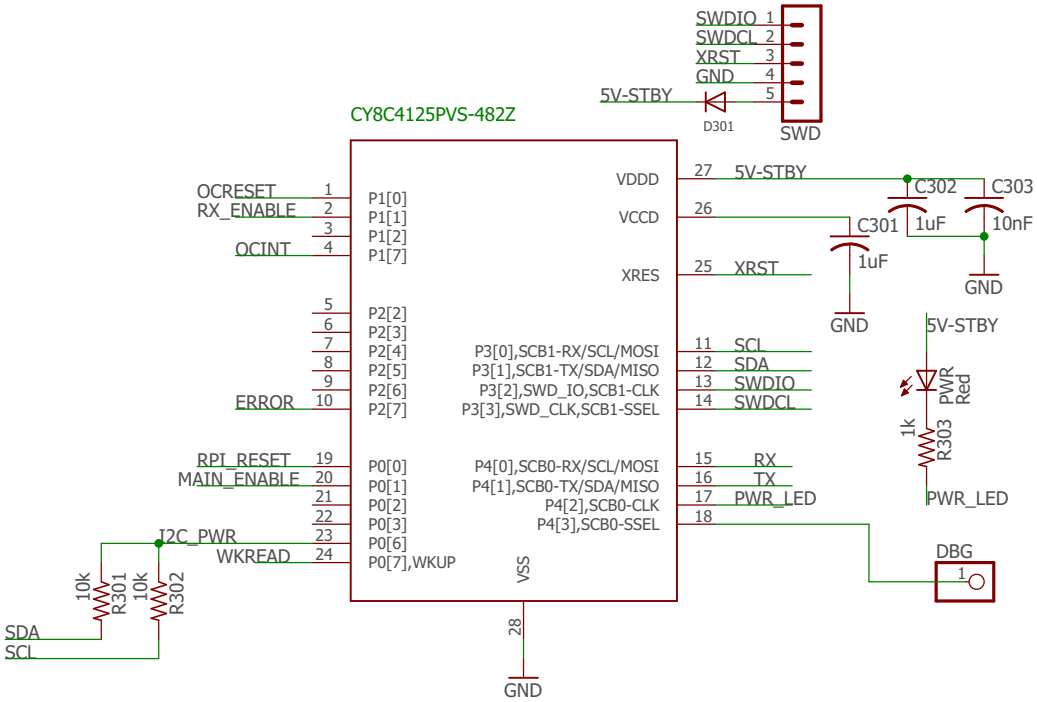
CY8C4125PVS-482Z
SWDIO 1
SWDCL 2
XRST 3
GND 4
5 5
SWD
5V-STBY
D301
OCRESET 1
RX_ENABLE 2
3
OCINT 4
P1[0]
P1[1]
P1[2]
P1[7]
5
6
7
8
9
ERROR 10
P2[2]
P2[3]
P2[4]
P2[5]
P2[6]
P2[7]
RPI_RESET 19
MAIN_ENABLE 20
21
22
I2C_PWR 23
WKREAD 24
P0[0]
P0[1]
P0[2]
P0[3]
P0[6]
P0[7],WKUP
VSS
28
GND
VDDD 27 5V-STBY
VCCD 26
XRES 25 XRST
P3[0],SCB1-RX/SCL/MOSI 11 SCL
P3[1],SCB1-TX/SDA/MISO 12 SDA
P3[2],SWD_IO,SCB1-CLK 13 SWDIO
P3[3],SWD_CLK,SCB1-SSEL 14 SWDCL
P4[0],SCB0-RX/SCL/MOSI 15 RX
P4[1],SCB0-TX/SDA/MISO 16 TX
P4[2],SCB0-CLK 17 PWR_LED
P4[3],SCB0-SSEL 18
C302
C303
C301
1uF
10nF
1uF
GND
GND
5V-STBY
PWR
Red
1k
R303
PWR_LED
DBG
1
10k
R301
10k
R302
SDA
SCL

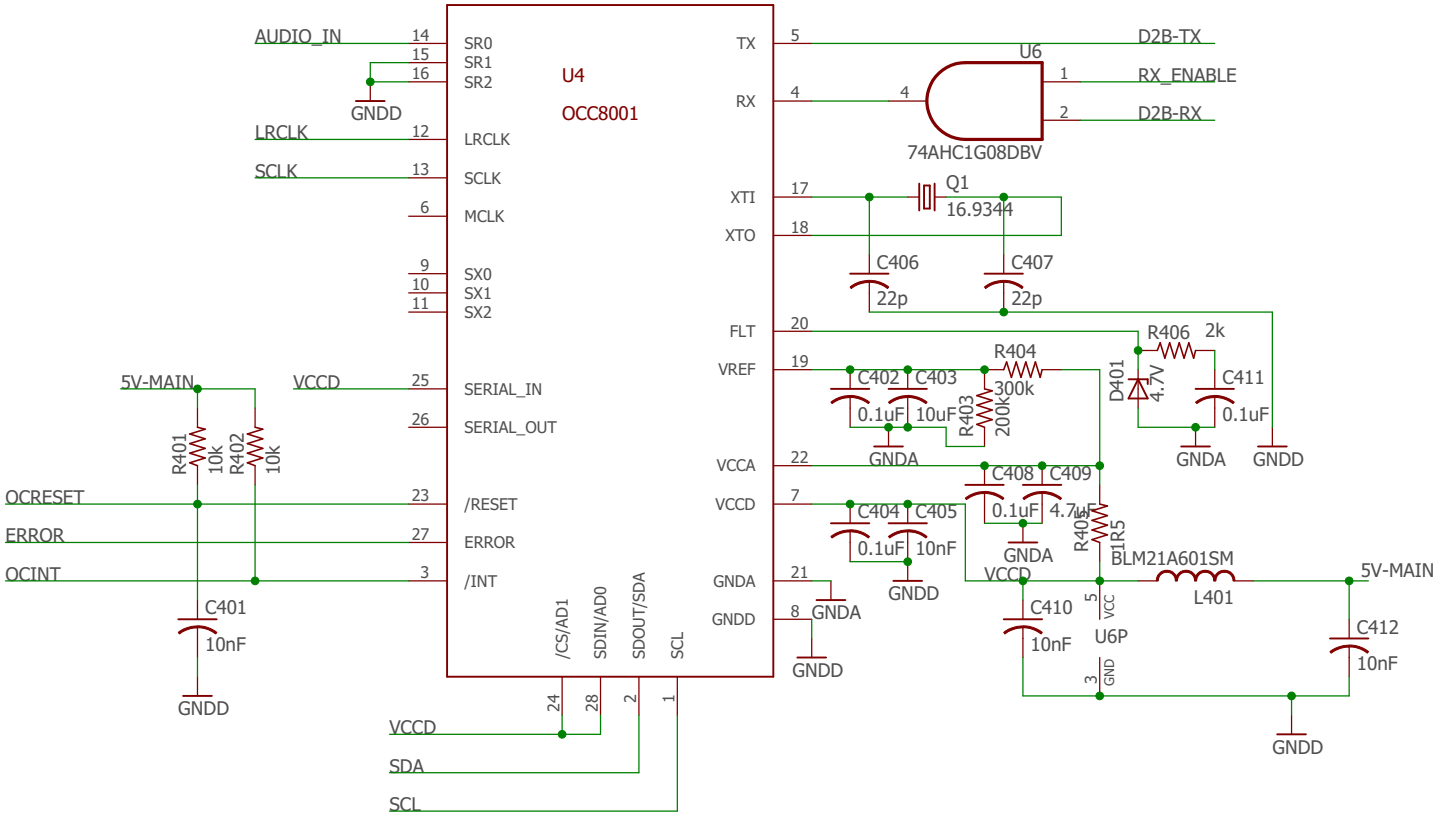

AUDIO_IN
LRCLK
SCLK
VCCD
OCRESET
ERROR
OCINT
5V-MAIN
R401 10k
R402 10k
C401 10nF
GNDD
U4
OCC8001
SR0
SR1
SR2
LRCLK
SCLK
MCLK
SX0
SX1
SX2
SERIAL_IN
SERIAL_OUT
/RESET
ERROR
/INT
/CS/AD1
SDIN/AD0
SDOUT/SDA
SCL
TX
RX
XTI
XTO
FLT
VREF
VCCA
VCCD
GNDA
GNDD
SDA
D2B-TX
RX_ENABLE
D2B-RX
U6
74AHC1G08DBV
Q1
16.9344
C406 22p
C407 22p
R406 2k
D401 4.7V
C411 0.1uF
R404 300k
R403 200k
C402 0.1uF
C403 10uF
C404 0.1uF
C405 10nF
C408 0.1uF
C409 4.7uF
R405 1R5
BLM21A601SM
L401
C410 10nF
U6P
VCC
GND
C412 10nF

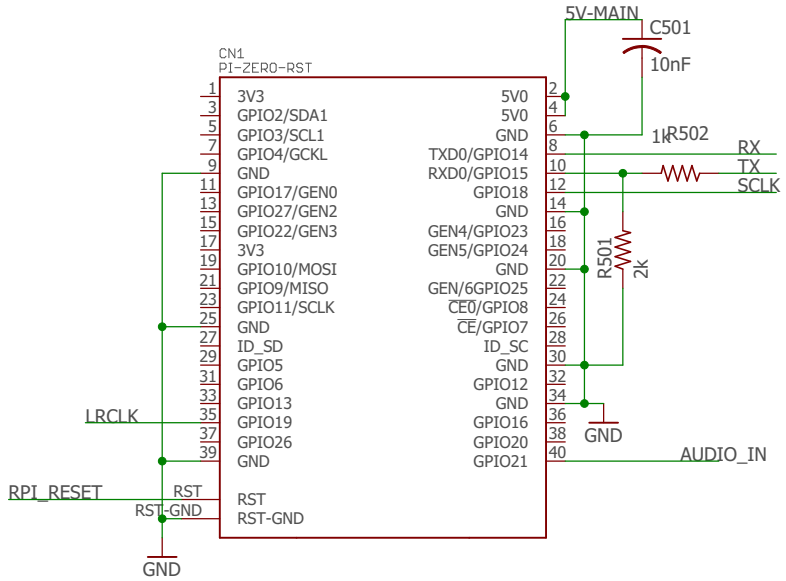
CN1
PI-ZERO-RST
1 3V3
3 GPIO2/SDA1
5 GPIO3/SCL1
7 GPIO4/GCKL
9 GND
11 GPIO17/GEN0
13 GPIO27/GEN2
15 GPIO22/GEN3
17 3V3
19 GPIO10/MOSI
21 GPIO9/MISO
23 GPIO11/SCLK
25 GND
27 ID_SD
29 GPIO5
31 GPIO6
33 GPIO13
35 GPIO19
37 GPIO26
39 GND
RST RST
RST-GND RST-GND
2 5V0
4 5V0
6 GND
8 TXD0/GPIO14
10 RXD0/GPIO15
12 GPIO18
14 GND
16 GEN4/GPIO23
18 GEN5/GPIO24
20 GND
22 GEN/6GPIO25
24 CE0/GPIO8
26 CE/GPIO7
28 ID_SC
30 GND
32 GPIO12
34 GND
36 GPIO16
38 GPIO20
40 GPIO21
5V-MAIN
C501
10nF
1k
R502
RX
TX
SCLK
R501
2k
GND
AUDIO_IN
LRCLK
RPI_RESET
GND

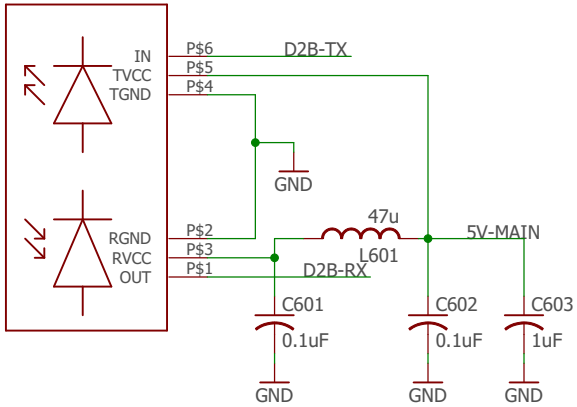
IN
TVCC
TGND
RGND
RVCC
OUT
P$6
P$5
P$4
P$2
P$3
P$1
D2B-TX
D2B-RX
GND
47u
L601
5V-MAIN
C601
0.1uF
C602
0.1uF
C603
1uF
GND
GND
GND